What Is a Vacuum Circuit Breaker (VCB)? Working Principle & Engineering Guide

xbrele.com/what-is-vacuum-circuit-breaker-working-principle

Hannah Zhu

December 15, 2025

Executive Summary: Engineering Quick View

The **Vacuum Circuit Breaker (VCB)** is the globally accepted standard for medium-voltage switching, offering a maintenance-free and environmentally safe alternative to SF6 and Oil technologies.

- **Voltage Class:** Dominant in the **12 kV to 40.5 kV** range for substations and heavy industry.
- **Core Technology:** Utilizes **Metal Vapor Arc Extinction** in a high-vacuum chamber ($< 10^{-6}$ bar) for rapid dielectric recovery.
- **Key Advantage:** Zero greenhouse gas emissions (No SF6), high mechanical endurance (up to 30,000 ops), and compact footprint.
- **Primary Applications:** Indoor metal-clad switchgear (e.g., VS1 Series) and outdoor pole-mounted reclosers (e.g., ZW32 Series).

Read time: *~8 mins* | ***Target Audience:*** *Electrical Engineers, EPCs, Utility Operators*

Standard Reference: IEC 62271-100, IEEE C37.04

Watch Video At: https://youtu.be/r4ByjQDZL40

1. Introduction – Why Vacuum Circuit Breakers Matter in Modern Power Systems

In the rapidly evolving landscape of medium-voltage (MV) power distribution, the "fit-and-forget" philosophy has become the gold standard for switching equipment. As power systems transition from centralized generation to complex, decentralized grids integrated with renewables, the demands on switchgear have shifted. It is no longer enough to simply interrupt a fault; modern breakers must handle frequent switching operations, withstand harsh environmental conditions, and minimize operational expenditure (OPEX).

Within this context, the **vacuum circuit breaker** (VCB) has decisively won the technological battle for voltage levels between **12 kV and 40.5 kV**. Having displaced bulk oil and minimum oil breakers decades ago, VCBs are now systematically replacing SF_6 (Sulfur Hexafluoride) technology, driven by both superior technical performance and stringent environmental mandates against greenhouse gases.

For electrical engineers, plant managers, and EPC contractors, a superficial understanding of VCBs is insufficient. Correctly specifying equipment for a high-duty cycle steel mill, a critical data center, or a remote mining substation requires a deep grasp of the VCB's internal physics, thermal behavior, and dielectric limits. This guide provides that engineering-level insight.

2. What Is a Vacuum Circuit Breaker?

A vacuum circuit breaker is a medium- or high-voltage switching device where the core function —current interruption—occurs inside a hermetically sealed chamber known as a **Vacuum Interrupter (VI)**. The "vacuum" typically refers to a pressure level below 10^{-4} Pa (10^{-6} mbar).

To truly define a VCB from an engineering perspective, we must look at the **physics of the arc**. In other technologies, the arc is an ionized gas (plasma) formed from the surrounding medium (oil vapor, air, or SF_6). In a vacuum circuit breaker, there is no surrounding gas. The arc is purely a **metal vapor plasma**, generated by the vaporization of the contact material itself at the moment of separation.

Definition by Technical Contrast

Understanding what a VCB *is* requires understanding what it *is not*. See our detailed comparison on Vacuum Contactor vs Vacuum Circuit Breaker for panel selection nuances, but generally:

- **vs. Oil Circuit Breakers (OCBs):** OCBs rely on the energy of the arc to vaporize oil, creating a hydrogen bubble to cool the arc. This process is slow, poses a massive fire risk, and leaves carbonized residue, necessitating frequent oil changes. VCBs eliminate these risks entirely.

- **vs. Air Circuit Breakers (ACBs):** ACBs use arc chutes to stretch and cool the arc in atmospheric air. To handle 12kV, an ACB requires massive clearance distances and magnetic blow-out coils, making them physically impractical for modern, compact switchgear.
- **vs. SF_6 Circuit Breakers:** SF_6 is an electronegative gas that captures free electrons to extinguish arcs. While effective, SF_6 is a potent greenhouse gas (GWP ~23,500). Furthermore, SF_6 decomposition products (powders) are toxic, complicating maintenance. VCBs are inherently "clean" and require no gas handling.

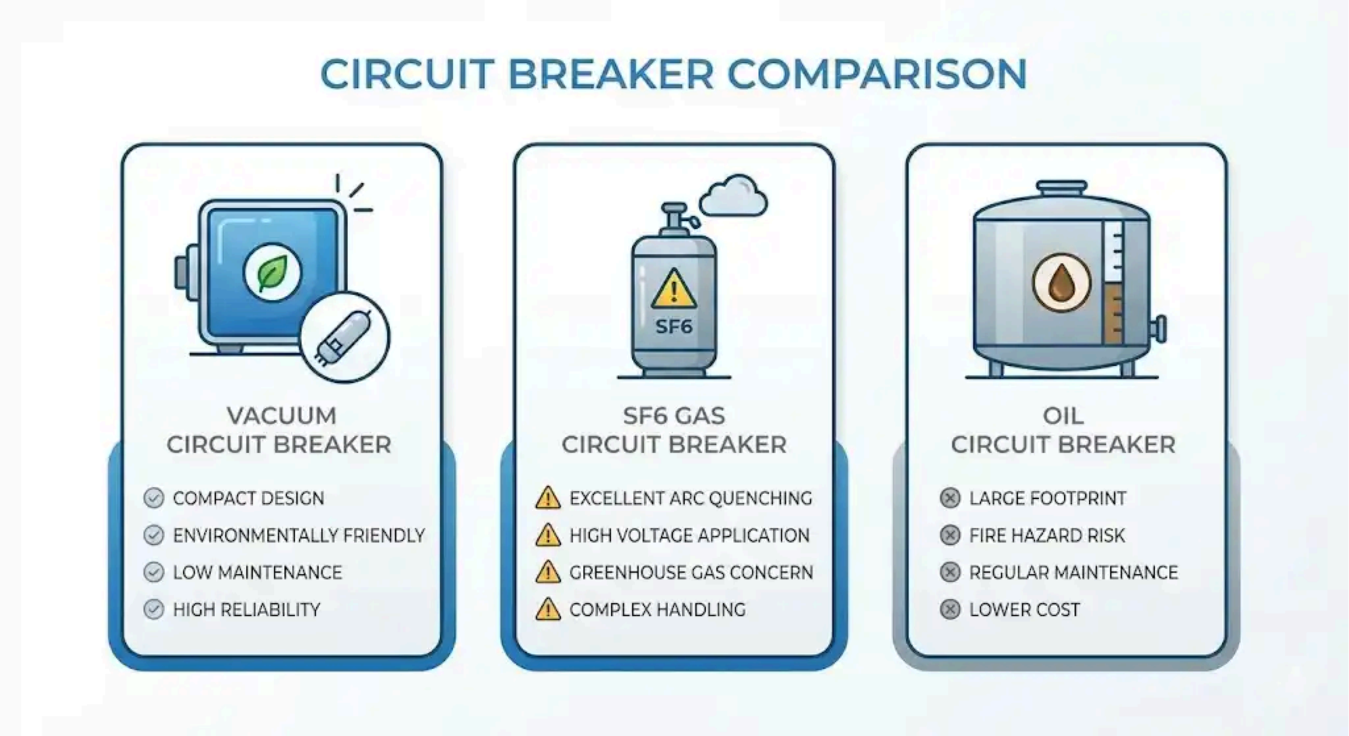

The VCB leverages the **Mean Free Path** principle: in a high vacuum, electrons can traverse the contact gap without colliding with gas molecules. Without collisions, an electron avalanche (breakdown) is difficult to initiate, giving vacuum gaps a dielectric strength far superior to air or SF_6 at small distances.

3. Main Components of a Vacuum Circuit Breaker

A vacuum circuit breaker is not just a "switch"; it is a precision-integrated system. Reliability depends on the synergy between the vacuum interrupter, the insulation, and the mechanism.

Vacuum Interrupter (The "Bottle")

The heart of the VCB is the vacuum interrupter. Its integrity is non-negotiable.

- **Enclosure:** Made of high-grade alumina ceramic, brazed to metal end-caps. It must maintain a vacuum for 20-30 years.
- **Contacts (The Critical Metallurgy):** You cannot use pure copper contacts; they would weld together. Modern VCBs use a **Copper-Chromium (CuCr)** alloy (typically 75% Cu / 25% Cr). Copper ensures conductivity, while Chromium prevents welding and aids in "gettering" (absorbing stray gas molecules) to maintain vacuum.

- **Contact Geometry (AMF vs. RMF):** This is a key specification detail.
  - *RMF (Radial Magnetic Field):* Uses spiral slots to force the arc to rotate around the contact edge, preventing local melting.
  - *AMF (Axial Magnetic Field):* Uses a coil structure to create a magnetic field parallel to the arc. This keeps the arc in a "diffuse" mode, spread evenly over the entire surface. **AMF is preferred for high short-circuit currents (e.g., 40kA, 50kA)** as it minimizes contact erosion. *(See also: How Does a Vacuum Contactor Extinguish Arc? for related arc physics).*

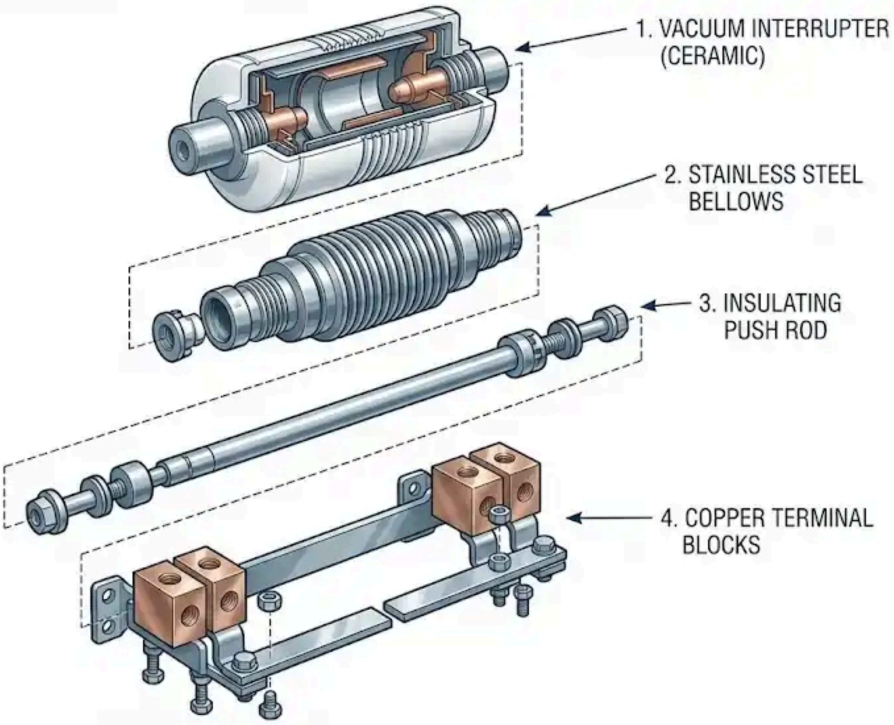

The Bellows

The Achilles' heel of early designs, the bellows is a stainless steel, accordion-like tube that allows the moving contact to travel typically 6mm to 20mm without breaking the vacuum seal. Modern hydro-formed bellows are rated for **M2 class** endurance (10,000 to 30,000 mechanical operations), far exceeding the lifespan of the primary system.

Operating Mechanism

Because vacuum interrupters have a very short stroke (distance) compared to SF_6 or Oil breakers, the mechanism must deliver high force over a short distance with precise damping.

- **Spring-Stored Energy:** The industry standard. A motor charges a spring, which is latched. Tripping releases the spring. It is robust and purely mechanical.
- **Magnetic Actuator:** A simplified design using a permanent magnet to hold contacts and a solenoid to switch them. With fewer moving parts, it offers higher reliability but requires complex electronic capacitors for control power.

Primary Conductors & Insulation System

Embedded Poles: In advanced VCBs like the **VS1 vacuum circuit breaker**, the vacuum interrupter is cast inside epoxy resin. This "embedded pole" technology protects the ceramic bottle from dust, humidity, and mechanical shock, significantly increasing creepage distance and reducing maintenance needs in dirty industrial environments.

Control & Auxiliary Circuits

This includes the anti-pumping relay (preventing the breaker from cycling open-close-open on a sustained fault), trip coils, and auxiliary contacts for SCADA feedback.

4. How Does a Vacuum Circuit Breaker Work?

The operation is a race against time—specifically, a race between the **Transient Recovery Voltage (TRV)** rising across the contacts and the **Dielectric Recovery** of the vacuum gap.

Normal Closed Condition

Current flows through the fixed and moving contacts. The contact resistance is extremely low (measured in micro-ohms, $\mu\Omega$). The external mechanism applies immense pressure (contact spring force) to prevent the contacts from popping open due to electrodynamic forces during a short circuit.

Fault Detection and Trip Command

Upon receiving a signal from the protection relay, the latch releases. The opening springs pull the moving contact downward. The separation speed is critical—too slow, and the arc burns too long; too fast, and the bellows may fracture.

Arc Extinction: The "Current Zero" Phenomenon

1. **Metal Vapor Generation:** As contacts part, the last microscopic point of contact melts and explodes, creating a bridge of metal vapor plasma. This plasma conducts the fault current.
2. **The Diffuse Mode:** In a well-designed AMF interrupter, this arc is spread across the whole contact surface, preventing gross melting.
3. **Current Zero:** In AC systems, current naturally passes through zero 100 times a second (50Hz). As current approaches zero, the energy input to the plasma stops.
4. **Rapid Condensation:** At the exact moment of current zero, the arc extinguishes. The metal vapor condenses onto the internal shields within microseconds.
5. **Dielectric Recovery:** The vacuum gap recovers its insulation strength almost instantly. If this recovery is faster than the rising TRV from the grid, the interruption is successful. If not, a **re-strike** occurs. Vacuum's exceptionally steep recovery curve is why it is so effective. For a deeper dive into arc physics, referencing Paschen's Law is essential for understanding breakdown voltages.

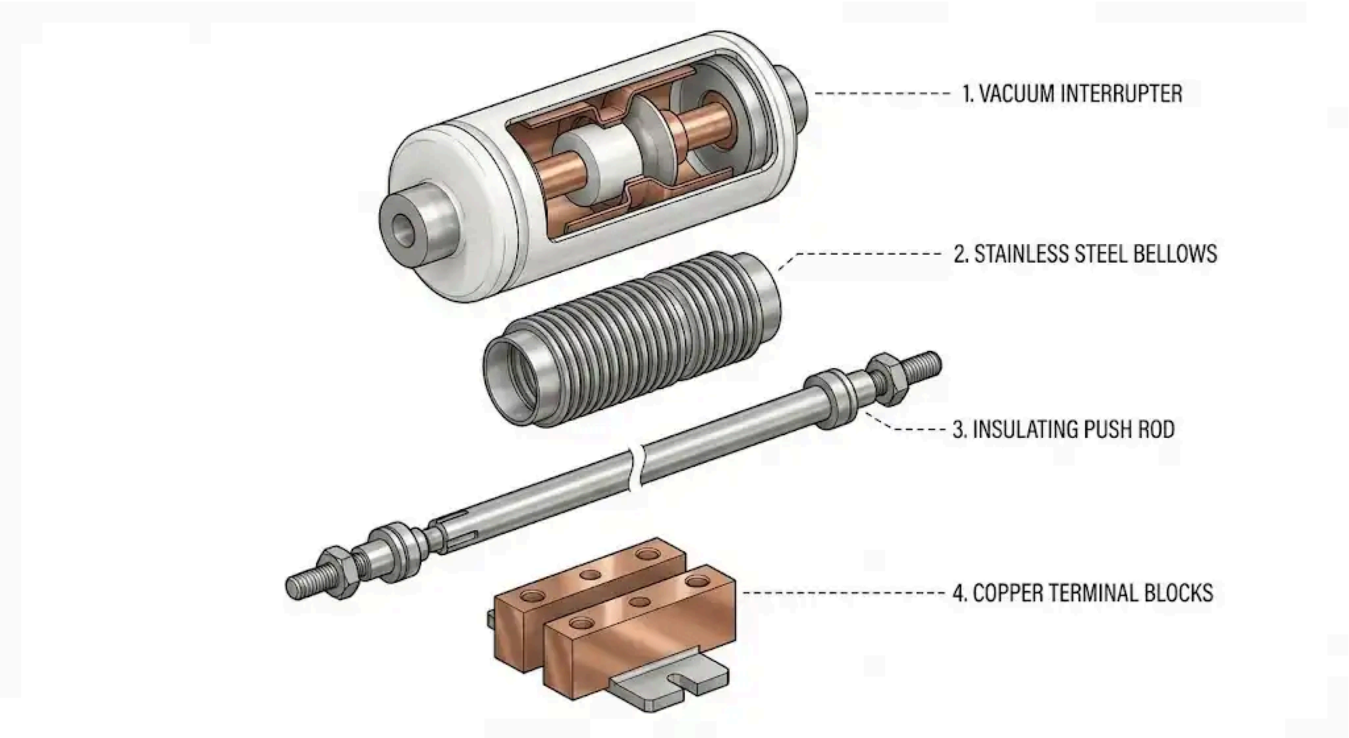

5. Vacuum Circuit Breaker Internal Structure (Exploded View)

(Note: Please refer to the diagram in Section 3 for the detailed component breakdown. An exploded view is critical for understanding the mechanical linkage).

6. Vacuum Circuit Breaker vs Other Technologies

The comparison chart below highlights why VCB is the choice for MV, while SF_6 is reserved for HV/EHV.

Feature	Vacuum Circuit Breaker (VCB)	SF_6 Circuit Breaker	Air Circuit Breaker (ACB)
Arc Quenching Medium	Vacuum ($<10^{-6}$ bar)	Sulfur Hexafluoride Gas	Atmospheric Air
Number of Operations	High (10,000 – 30,000)	Medium (2,000 – 5,000)	Low
Maintenance	Sealed for Life	Gas Pressure Checks Required	Arc Chute Cleaning
Size / Footprint	Very Compact	Compact	Large / Bulky
Fire Hazard	None	Low (Non-flammable gas)	Moderate (Ionized air)
Environmental	**Green** (Zero Emissions)	**High Impact** (GHG)	Neutral
Restrike Risk	Very Low (High recovery speed)	Low	Medium

7. Typical Applications of Vacuum Circuit Breakers

Substations & Utilities

Utilities use VCBs for distribution feeders (11kV to 33kV). The high reliability means they can be installed in remote unmanned substations.

Industrial Plants (Motor Switching)

This is a VCB stronghold. Motors require frequent starting and stopping. VCBs can handle thousands of switching cycles without contact maintenance.

- *Engineering Note:* When switching motors, engineers must be wary of **virtual chopping** and multiple re-ignitions. It is standard practice to install **RC Snubbers** or Zinc Oxide Surge Arresters alongside the VCB to protect the motor insulation.
- **VS1 vacuum circuit breaker**: The workhorse for indoor metal-clad switchgear panels (like KYN28 type).

Mining & Arc Furnaces

Electric Arc Furnaces (EAF) are the ultimate torture test, requiring up to 100 switching operations *per day*. Only VCBs (often with magnetic actuators) can survive this duty cycle. The hermetically sealed contacts are also immune to the conductive coal dust and humidity often found in mines.

RMU and Ring Networks

Smart grids require automated switching at the distribution level.

- **ZW32 outdoor vacuum circuit breaker**: Often deployed as an "Auto-Recloser" on overhead lines to clear transient faults (like lightning strikes) automatically.
- **ZW20 pole-mounted vacuum circuit breaker**: A boundary switch often gas-insulated or solid-insulated for the tank, but using vacuum for the actual breaking, ensuring zero maintenance on the pole top.

8. FAQs: Engineering & Maintenance Insights

1. What is the "Current Chopping" phenomenon? Because vacuum is such an efficient interrupter, it can sometimes extinguish the arc *before* the natural current zero (e.g., at 3A or 4A instead of 0A), specifically when switching small inductive currents (like unloaded transformers). This sudden "chop" traps magnetic energy, creating high transient over-voltages. While modern CuCr contact materials minimize this, surge arresters are recommended for sensitive loads.

2. How do I test a Vacuum Circuit Breaker? You cannot check the vacuum visually.

- **VIDAR Test (Vacuum Integrity):** A high DC voltage (e.g., 40kV DC for a 12kV breaker) is applied across the open contacts. If the vacuum is intact, no current flows. If air has leaked in, it will flash over.
- **Contact Resistance (Ductor) Test:** Measures the resistance of the main circuit (in micro-ohms). A high reading indicates contact wear or loose connections.

3. Why do VCBs have a "spring charging" motor? The closing spring requires significant force to compress. A small electric motor charges this spring automatically after every closing operation, ensuring the breaker is always ready to perform an "Open-Close-Open" (O-C-O) cycle immediately if a fault occurs.

4. Can VCBs be used for DC applications? Generally, no. VCBs rely on the AC current zero to extinguish the arc. In a DC circuit, current never crosses zero naturally. Special "counter-current injection" circuits are needed to use vacuum technology for DC breaking.

5. What happens if the bellows fail? If the bellows develop a microscopic crack, the vacuum is lost. The interrupter will fail to clear a fault, likely resulting in a catastrophic explosion of the pole unit due to the uncontained arc. This is why mechanical endurance (M2 class) is a critical

specification.

6. Are VCBs suitable for capacitor bank switching? Yes, they are excellent for this (Class C2 rating) due to high dielectric strength. However, precise point-on-wave switching or pre-insertion resistors are sometimes used to limit inrush currents.

9. Conclusion + CTA

The vacuum circuit breaker has evolved from a niche technology to the backbone of modern medium-voltage infrastructure. Its dominance is not accidental—it is the result of inherent physical advantages: a metal vapor arc that extinguishes at current zero, a recovery speed that outpaces grid transients, and a sealed design that ignores dirty environments.

However, not all VCBs are created equal. The quality of the brazing, the purity of the CuCr alloy, and the precision of the operating mechanism determine whether a breaker lasts 5 years or 30.

Don’t compromise on grid reliability. For critical infrastructure projects, working with an experienced manufacturer is essential. XBRELE specializes in high-end vacuum switching technology tailored for demanding industrial and utility applications.

Ready to specify your next project? Contact XBRELE’s engineering team to discuss vacuum circuit breaker selection, OEM customization, or consult our **vacuum circuit breaker manufacturer** page for detailed technical specifications.